Protective Shipment and Storage Cases

You've made a smart and valuable investment in HELIOS products for your current and future projects, so protect them for the long haul with professional transport and storage cases. Labsphere has worked with top grade case manufacturers to custom make cases that fit your system like a glove. These cases are created with wipeable surfaces and closed cell foam that is Class 100,000 (ISO Class 5) clean room compliant. They are also weather-resistant (not weather-proof) for use in field campaigns.

VALUE

7U foam-lined Rack Case with front/back removable access covers
- No need to take rack from the case.

12" and 20" System Cases with pre-cut foam, 1/3 top removable case cover

Easy storage compartments for accessories and cables

Closed cell Class 100,000 (ISO Class 5) clean room compatible materials

Weather-resistant construction

Removable and storable casters for easy movement of systems

External handles and locks for easy and secure handling

HSA-CASE-20	SYSTEMS - HELIOS	Protective Shipment & Carry Case for HELIOS 20" System Sphere Cage	PP-04588-000
HSA-CASE-12	SYSTEMS - HELIOS	Protective Shipment & Carry Case for HELIOS 12" or 8" System Sphere Cage	PP-04588-100
HSA-CASE-RACK	SYSTEMS - HELIOS	Protective Shipment & Carry Case for HELIOS System Rack	PP-04588-200

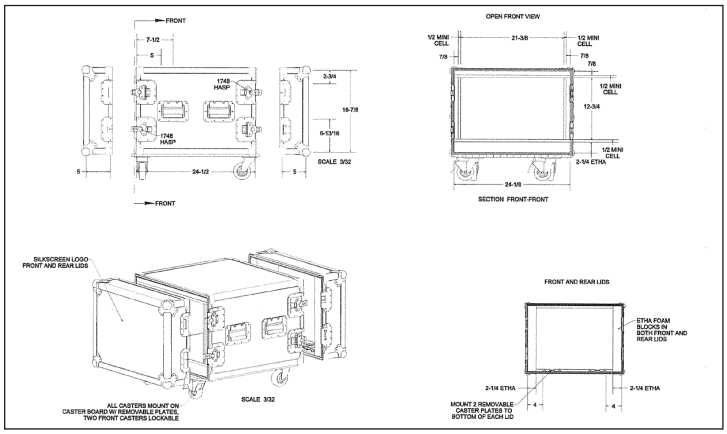

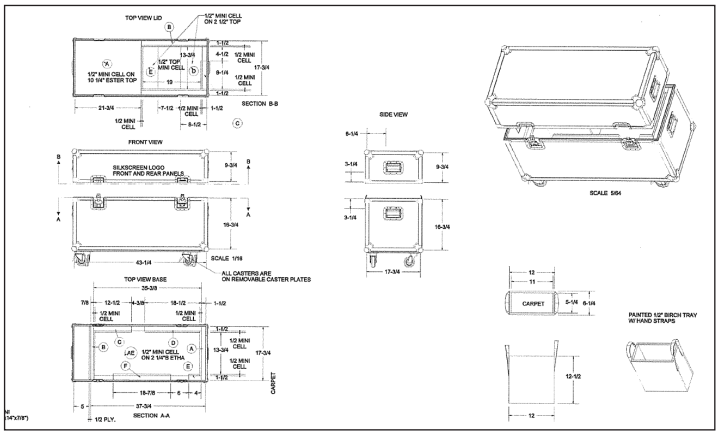

© 2015 Labsphere, Inc. All rights reserved.

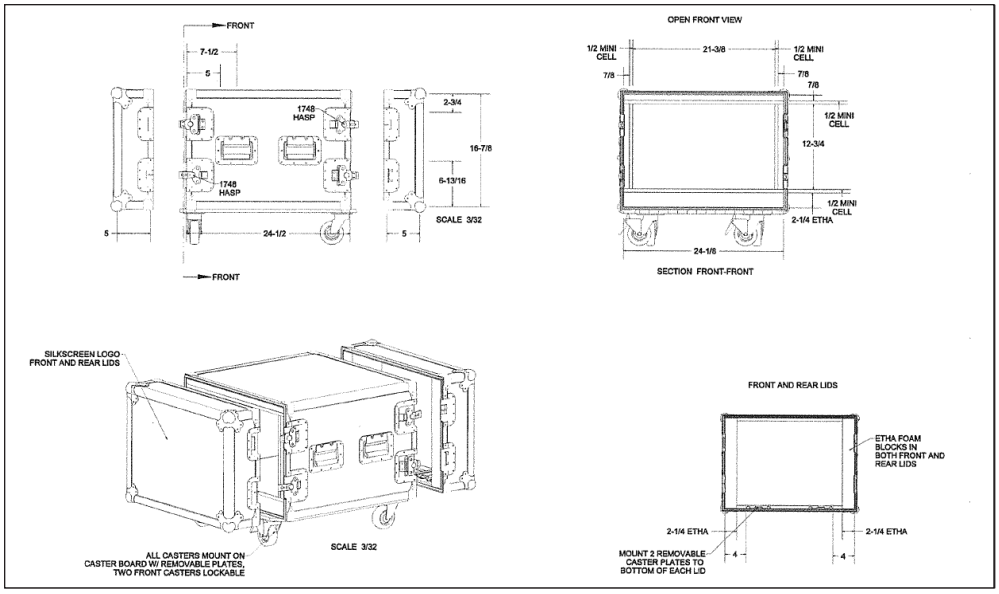

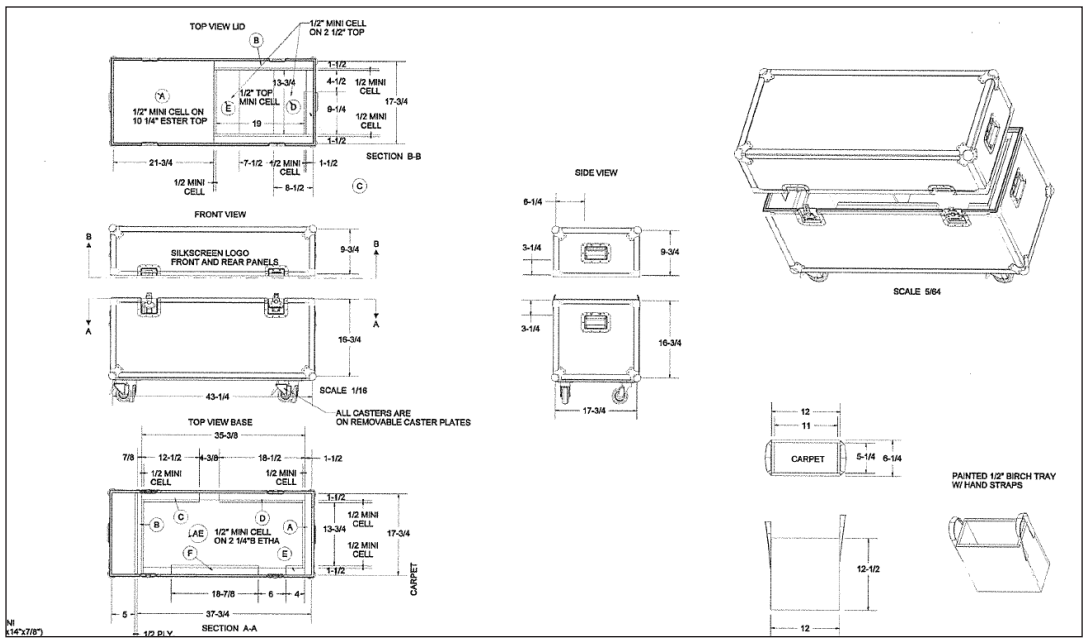

© 2015 Labsphere, Inc. All rights reserved.